Name- Pratyush Kumar Singh Sec- A Roll no -23 Stream- CSE(IOT)

Objective:- Realization of NOT, OR, AND and XOR gates using NAND gate.

Experiment description:- In digital electronics, a NAND gate (NOT-AND) is a logic gate which produces an output which is false only if all its inputs are true; thus its output is complement to that of an AND gate. A LOW (0) output results only if all the inputs to the gate are HIGH (1); if any input is LOW (0), a HIGH (1) output results. A NAND gate is made using transistors and junction diodes. By De Morgan's laws, a two-input NAND gate's logic may be expressed as ~AB=~A+~B.

Circuit Diagram :-

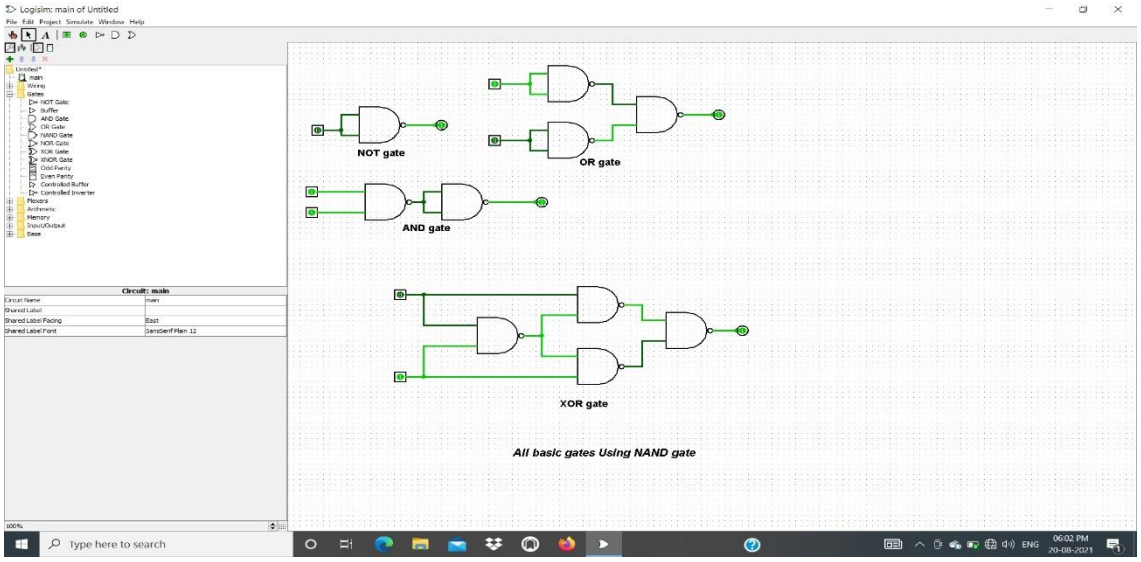

Truth Table:-

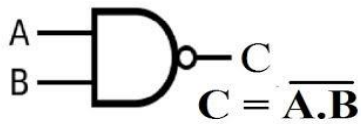

Truth Table

INPUT		OUTPUT
A	B	A NAND B
0	0	1
0	1	1
1	0	1
1	1	0

ProjectIoT123.com

Conclusion:- The NAND gate has the property of functional completeness, which it shares with the NOR gate. That is, any other logic function (AND, OR, etc.) can be implemented using only NAND gates.